REACTION FORCES IN DECK							
Node	Indication	Fx (kN)	Fy (kN)	Fz (kN)	Mx (kNm)	My (kNm)	Mz (kNm)
F1	Max/Min	278/-21	296/-136	11/-11	-89	49/-49	7/-88
F2	Max/Min	-301	197/-235	0	0	0	123
F3	Max/Min	0	+20	-55	+17	0	0
F4	Max/Min	-28	0	+28	-8	0	+8
F5	Max/Min	0	0	+55	-17	0	0
F6	Max/Min	-28	0	-28	-8	0	-8

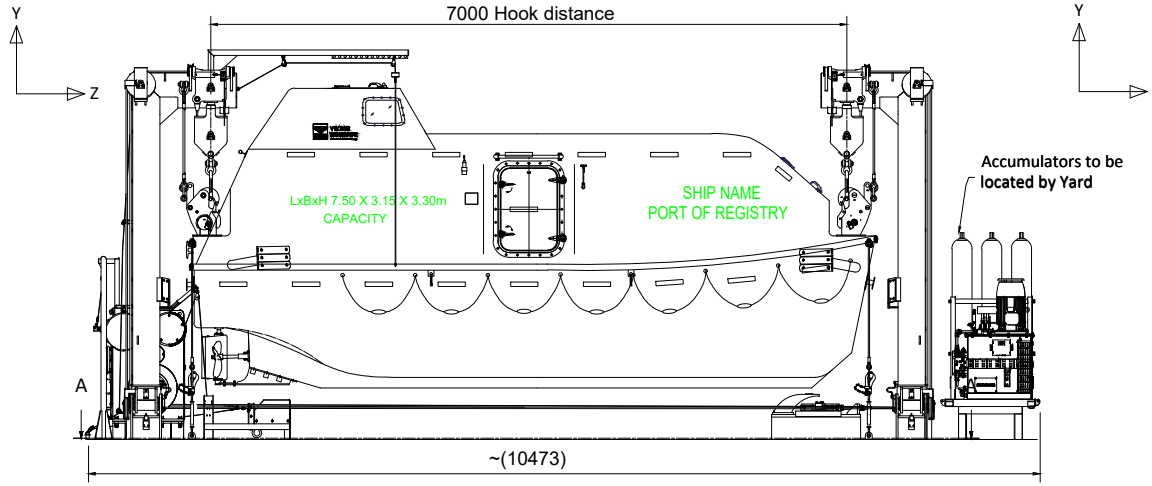

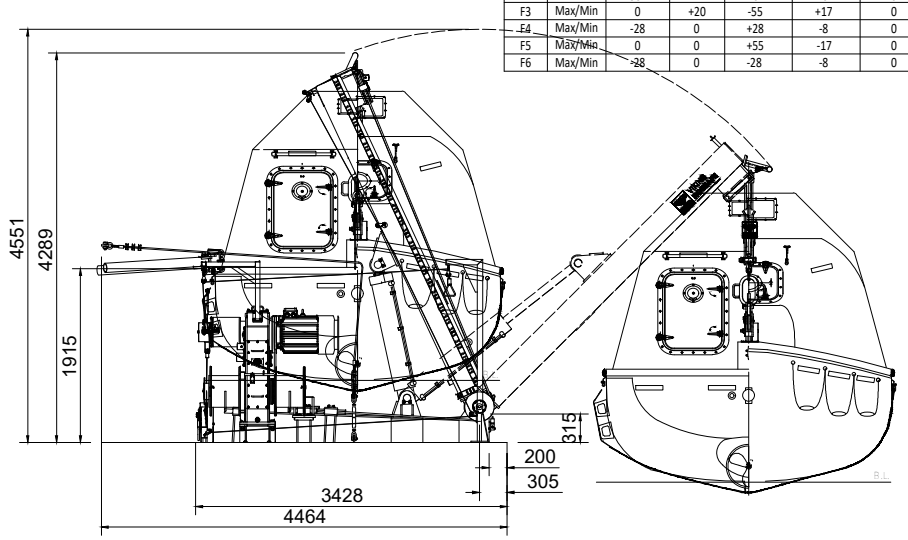

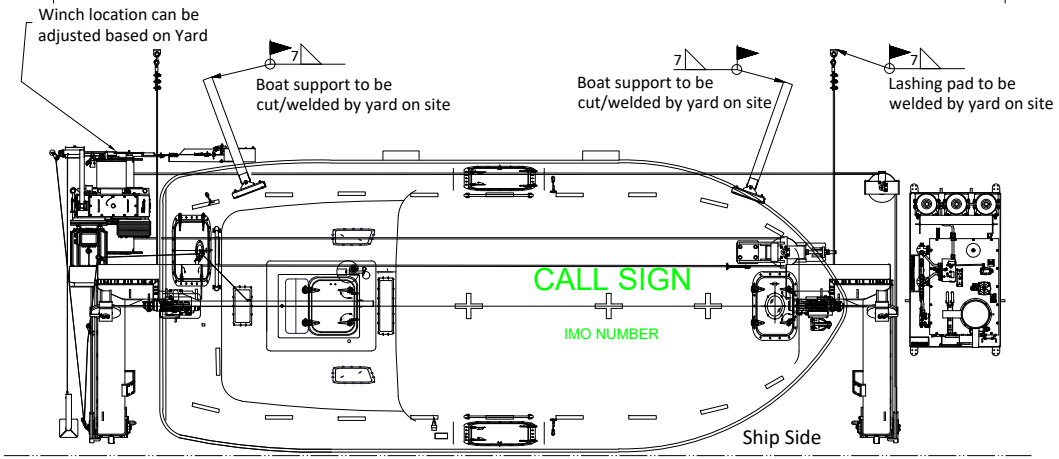

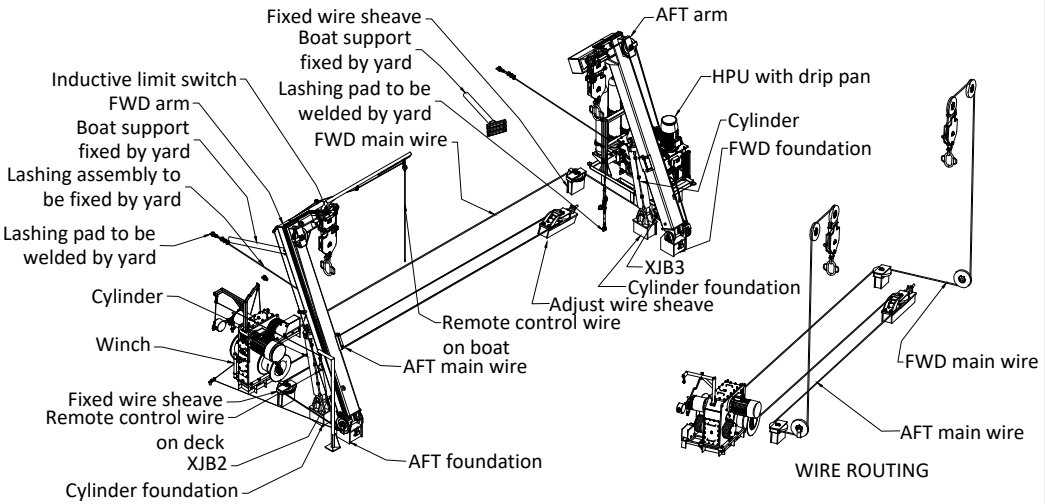

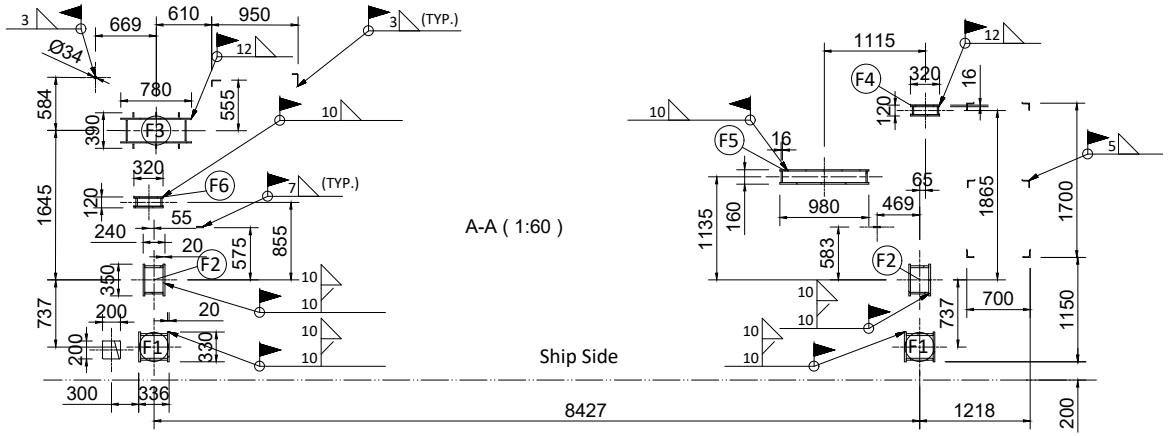

LHD-110 Lifeboat Davit

Technical data:
Davit safety working load: 11,000 kg
Lowering: 11,000 kg
Hoisting: Empty lifeboat + 3 persons

Notes:

1. All embarkation and service platforms etc.: Yard supply;
2. Field welds to be performed by yard are shown by ▶;
3. All field welds to be performed according to approved WPS (Yard responsibility). All field welding is subject to Class approval prior to start welding;
4. Reaction forces as joint loads each side, marked with nodes on deck interface.
   For orientation of forces see legend with marked XYZ vectors.
   All forces are point loads, nominal forces without any factors.
5. Starter cabinet and remote control to be located by yard.
6. Boat supports and lashing brackets to be located by yard.
7. Starboard davit shown, Portside to be mirrored.

REV	DESCRIPTION	BY	CHECK	APPRO	DATE
4	Update VIEW of davit	ALJI	MISO	WAGU	16.03.2022
3	Update SWL	ALJI	MISO	WAGU	15.01.2020
2	Ressued for approval	SHWA	ALJI	WAGU	01.07.2019
1	Update for construction	ALJI	WAGU	TTH	22.05.2018

REVISION HISTORY

VIKING NORSAFE
VIKING Norsafe Life-Saving Equipment Norway AS
P.O Box 115
4852 Færvik
NORWAY
Tel: +47 37 05 85 00
Fax: +47 37 05 85 01
24/7 Service: +47 37 05 63 33
Email: Viking-Norsafe@viking-life.com

Drawn by	Check by	Appr. by	Initial release date
ALJI	WAGU	GNI	18.01.2017

Project number | Project name | Client number

Title
LHD-110 LIFEBOAT DAVIT
With JYN-75

Material Number
Weight
Projection method

Drawing type	Tolerances	Scale	Sheet Size
GA	ISO 2768-mK, ISO 13920-BF	1:50	A3
Drawing Number		Revision	Sheet No.
G-501741		4	1/1